جبر بول

Boolean Algebra

جبر بول

- عامل اصلي قوت سيستم‌هاي ديجيتال:
  - جامعيت و قدرت فرمولاسيون رياضي جبر بول
- مثال:

IF the garage door is open
AND the car is running
THEN the car can be backed out of the garage

هر دو شرط:
The garage door is open و
The car is running
باید true باشند تا بتوان ماشین را از گاراژ بیرون آورد.

Digital Systems: Boolean Algebra and Logical Operations

- **In Boolean algebra:**
  - Values: 0,1
  - 0: if a logic statement is false,
  - 1: if a logic statement is true.
- **Operations: AND, OR, NOT**

X	Y	X AND Y
0	0	0
0	1	0
1	0	0
1	1	1

X	Y	X OR Y
0	0	0
0	1	1
1	0	1
1	1	1

X	NOT X
0	1
1	0

بررسی مثال قبلی

IF the garage door is open
AND the car is running
THEN the car can be backed out of the garage

door open?	car running?	back out car?
false/0	false/0	false/0
false/0	true/1	false/0
true/1	false/0	false/0
true/1	true/1	TRUE/1

- 2 گزینه برای هر متغیر
- 2^n گزینه برای n متغیر
- هر متغیر می‌تواند توسط یک سویـچ پیاده‌سازی شود
- چینش سویـچ‌ها توسط نوع عملگرها تعیین می‌شود

سيستم‌هاي نوعي

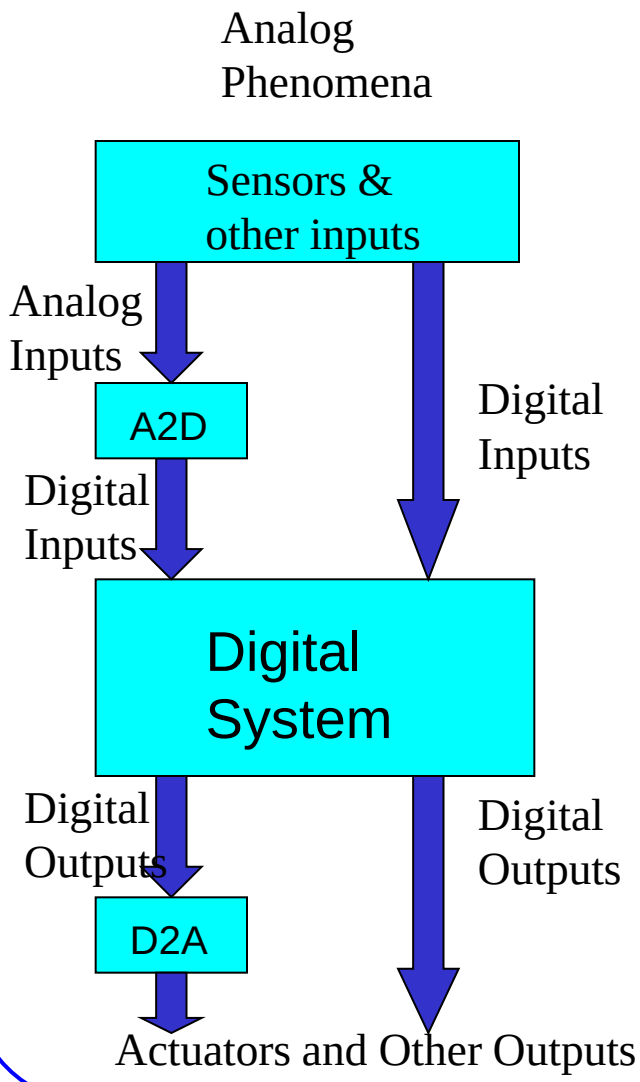

- **ورودي‌ها:**
  - فشار كليد (ديجيتال)
  - درجة حرارت محيط (آنالوگ)
  - تغييرات سطح مايع (آنالوگ)
- **خروجي‌ها:**
  - ولتاژ راه اندازي موتور (آنالوگ)
  - بازكردن/بستن شير (آنالوگ يا ديجيتال)
  - نمايش روي LCD (ديجيتال)

مثال: دستگاه اطفاي حريق خودكار

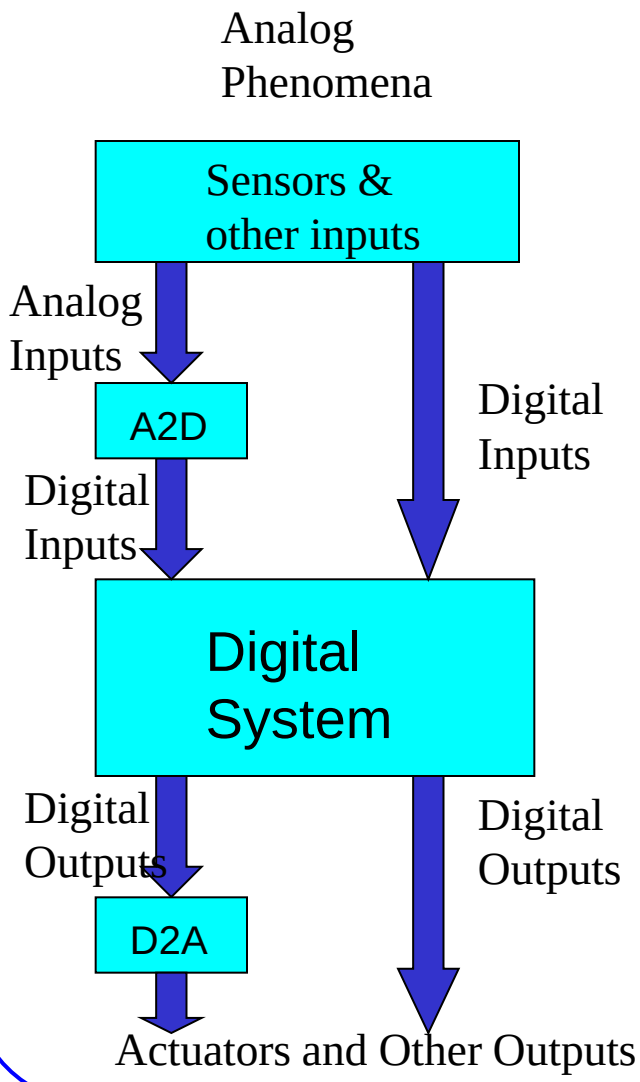

- **رفتار سيستم:**
  - اگر درجة حرارت محيط از مقدار مشخصي بيشتر است و كليد فعال سازي دستگاه روشن است، شير آب را باز كن.

مثال: چراغ هشدار کمربند ايمني

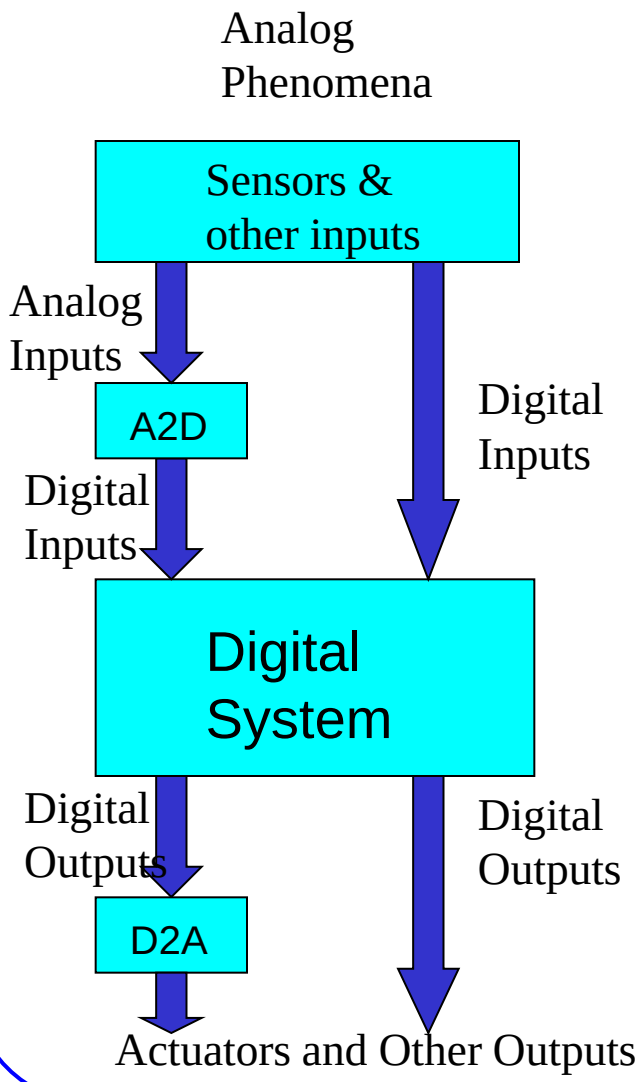

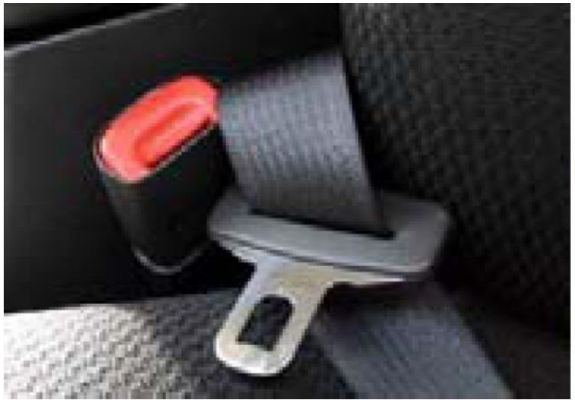

- S = ‘1’: کمربند بسته است.
- K = ‘1’: سوييچ داخل است.
- P = ‘1’: راننده روي صندلي است.

سويچها: عملگرهاي منطقي

EXAMPLE:

IF car in garage
AND garage door open
AND car running
THEN back out car

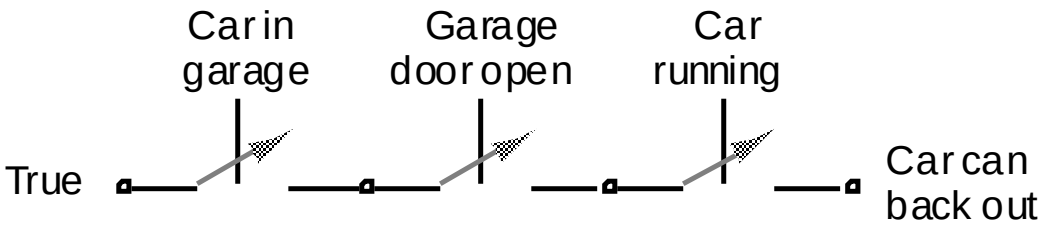

EXAMPLE:

IF (car in driveway
OR (car in garage
AND garage door open))

AND car running
THEN can back out car

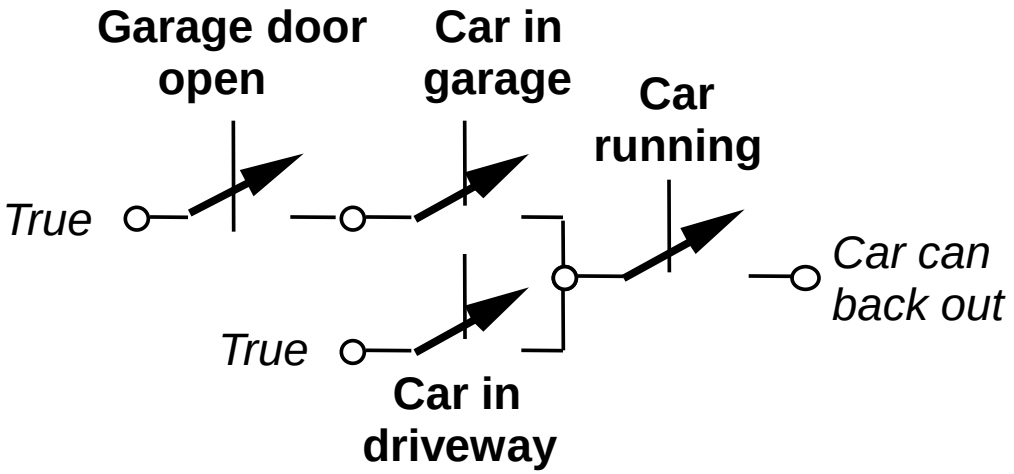

Binary Logic

- Deals with **binary variables** that take 2 discrete values (0 and 1), and **logic operations**
- Basic logic **operations**:
  - AND, OR, NOT
- Binary/logic **variables** are typically represented by letters: A,B,C,…,X,Y,Z

Binary Logic Function

F(vars) = *expression*

set of binary variables

- Operators (+, •, ')
- Variables
- Constants (0, 1)
- Groupings (parenthesis)

Example:

$$F(a,b) = a' \cdot b + b'$$

$$G(x,y,z) = x \cdot (y+z')$$

Boolean Logic Operators

- AND (also $\cdot, \wedge$)
- OR (also $+, \vee$)
- NOT (also $', \bar{}$)

Binary

Unary

- $F(a,b) = a \cdot b$, reads F is 1 <u>if and only if</u> a=b=1
- $G(a,b) = a+b$, reads G is 1 if either a=1 or b=1 or both
- $H(a) = a'$, reads H is 1 if a=0

Boolean Operators (cont.)

- **1-bit logic AND resembles binary multiplication:**

$$0 \cdot 0 = 0, \quad 0 \cdot 1 = 0,$$

$$1 \cdot 0 = 0, \quad 1 \cdot 1 = 1$$

- **1-bit logic OR resembles binary addition, except for one operation:**

$$0 + 0 = 0, \quad 0 + 1 = 1,$$

$$1 + 0 = 1, \quad 1 + 1 = 1 \ (\neq 10_2)$$

Truth Tables for logic operators

Truth table:

A tabular form that <u>uniquely</u> represents the relationship between the input variables of a function and its output

2-Input AND

A	B	F=A•B
0	0	0
0	1	0
1	0	0
1	1	1

2-Input OR

A	B	F=A+B
0	0	0
0	1	1
1	0	1
1	1	1

NOT

A	F=A'
0	1
1	0

Truth Tables (cont.)

- **Q:**
  - Let a function F() depend on *n* variables. How many rows are there in the truth table of F() ?
- **A:**
  - 2^n rows, since there are 2^n possible binary patterns/combinations for the *n* variables

Logic Gates

- Logic gates are abstractions of electronic circuit components that operate on one or more input signals to produce an output signal.

2-Input AND

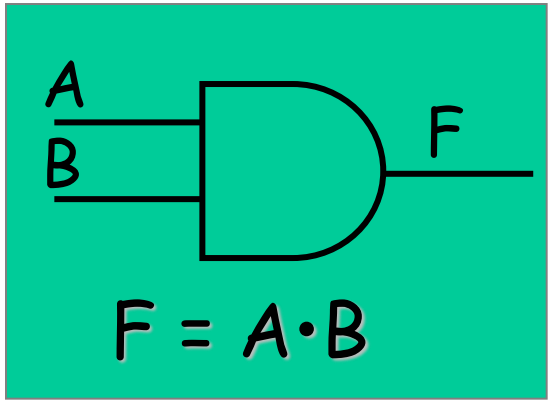

2-Input OR

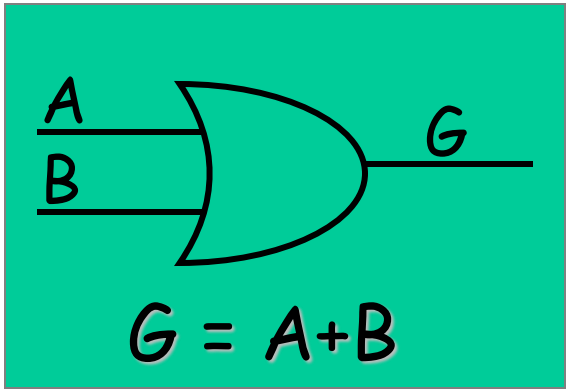

NOT (Inverter)

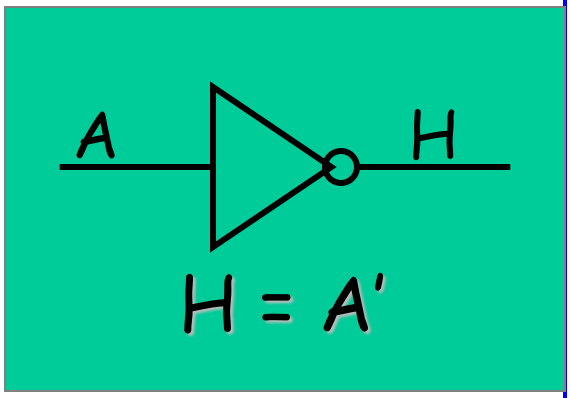

Timing Diagram

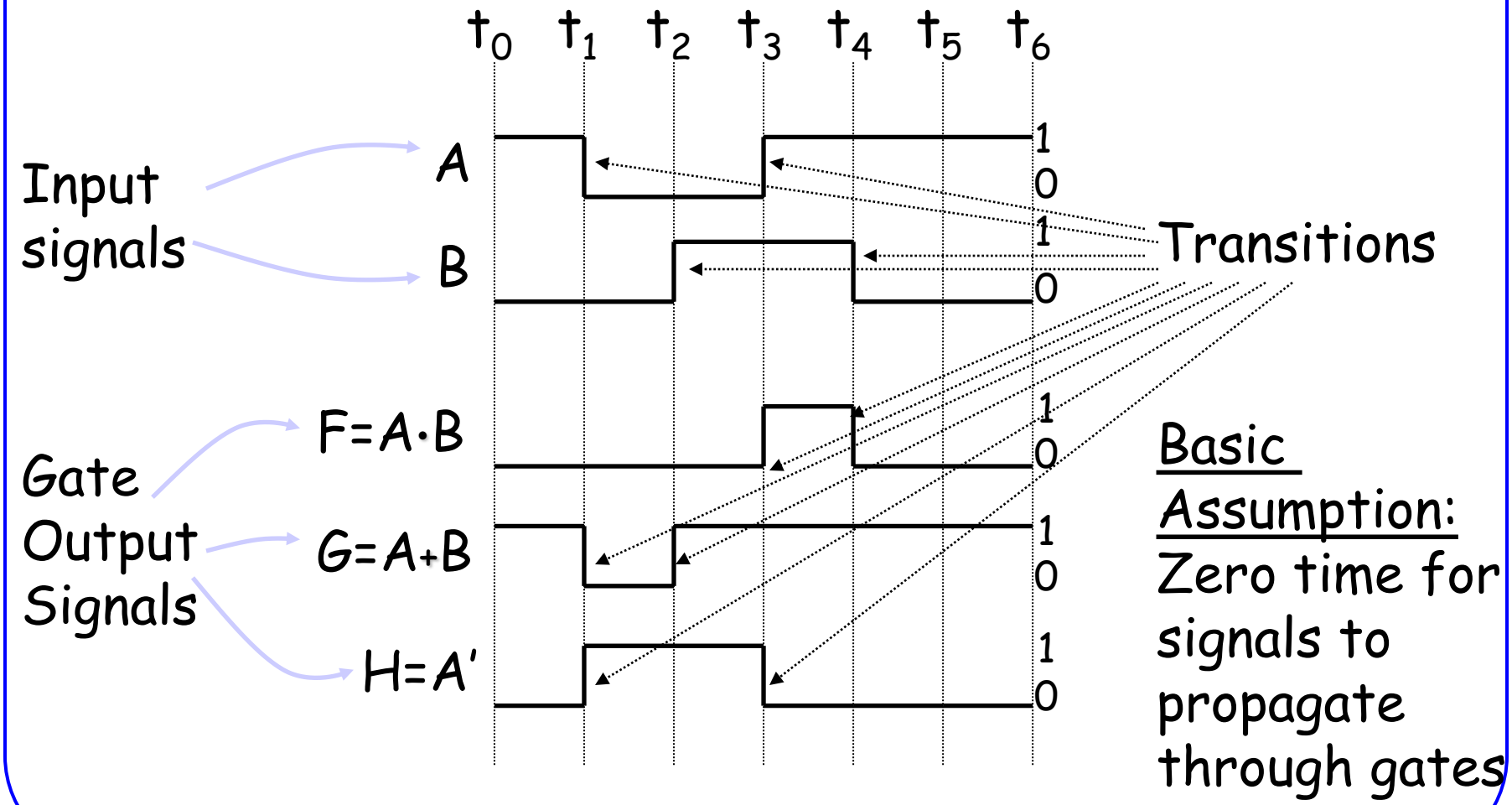

The Real World

- Physical electronic components are continuous, not discrete!
  - Transition from logic 1 to logic 0 does not take place instantaneously in real digital systems
- These are the building blocks of all digital components

- Intermediate values may be visible for an instant
- Boolean algebra useful for describing the steady state behavior of digital systems
- Be aware of the dynamic, time varying behavior too!

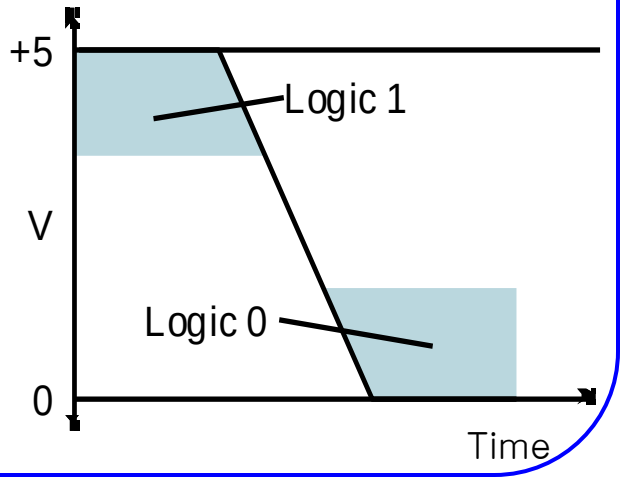

Inverter: a circuit that implements logical negation (NOT)

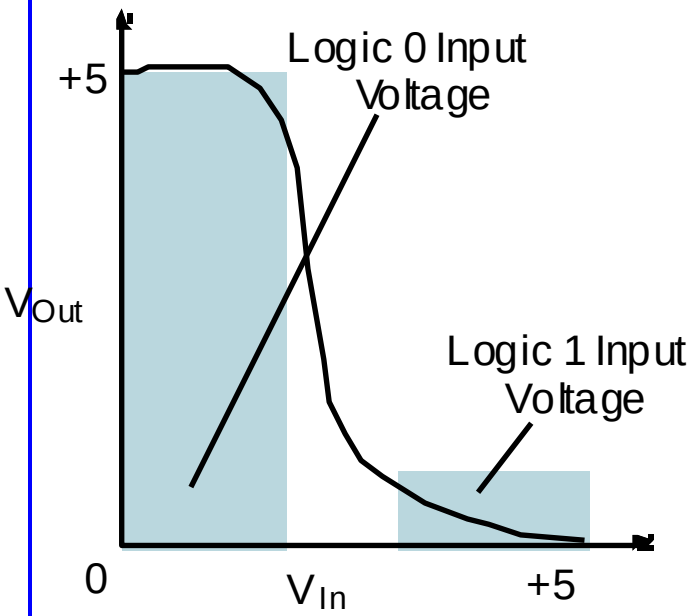

- Inverter behavior as a function of input voltage:
- Input changes from 0V to 5V
- Output holds at 5V for some range of small input voltages
- Then changes rapidly, but not instantaneously!

Combinational Logic Circuit from Logic Function

- **Combinational Circuit Design:**
- **F = A' + B•C' + A'•B'**
  - Connect input signals and logic gates:
    - Circuit input signals → from function variables (A, B, C)
    - Circuit output signal → function output (F)
    - Logic gates → from logic operations

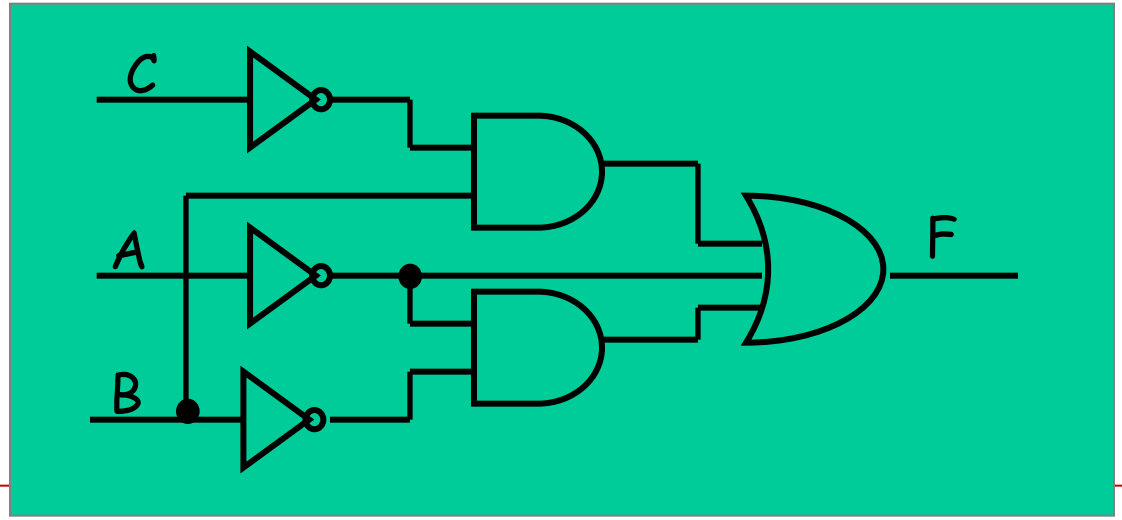

Logic Evaluation

Circuit of logic gates :

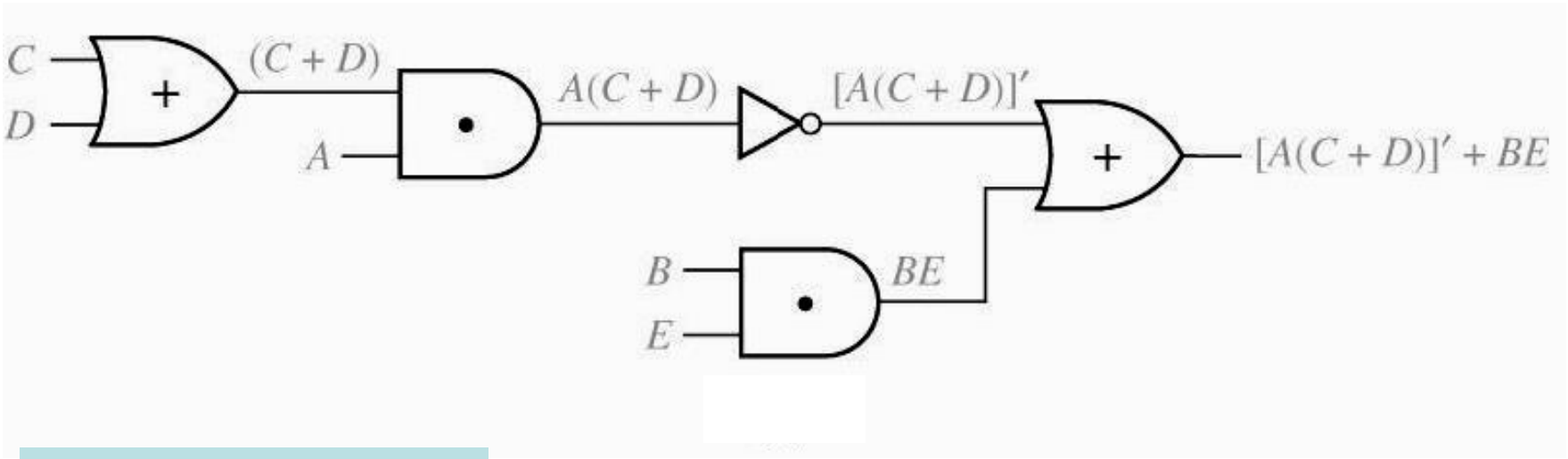

Logic Expression : $[A(C+D)]'+BE$

Logic Evaluation : If A=B=C=1, D=E=0, then:

$$[A(C+D)]'+BE=[1(1+0)]'+1\cdot 0=[1(1)]'+0=0+0=0$$

Combinational Logic Optimization

- Consider functions F and G:

  $F = A' + B \cdot C' + A' \cdot B'$ and

  $G = A' + B \cdot C'$
- They seem different but let's observe their truth tables
- They are identical → same function
- In order to design a cost-effective and efficient circuit, we must minimize
  - the circuit's size
    - area
  - propagation delay
    - time required for an input signal change to be observed at the output line
- Use G to implement the logic circuit
  - Fewer components

A	B	C	F	G
0	0	0	1	1
0	0	1	1	1
0	1	0	1	1
0	1	1	1	1
1	0	0	0	0
1	0	1	0	0
1	1	0	1	1
1	1	1	0	0

Combinational Logic Optimization

F=A’ + B•C′ + A′•B′

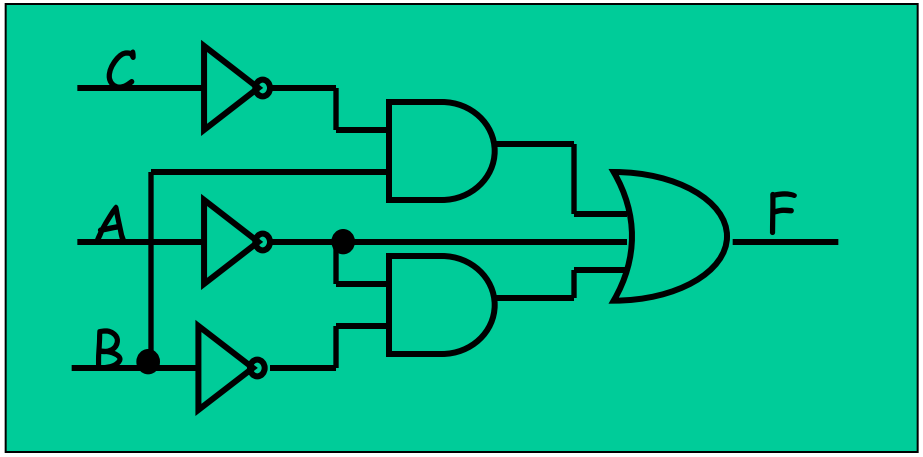

G=A’ + B•C′

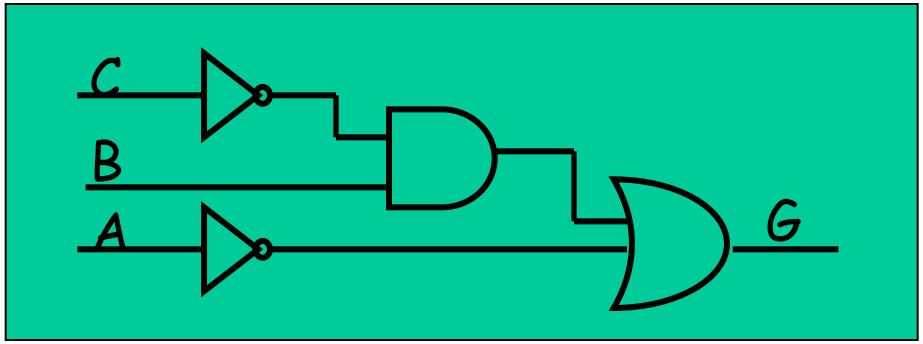

Equivalence Checking Using Truth Table

$$AB'+C \stackrel{?}{=} (A+C)(B'+C)$$

n variable needs $\underbrace{2\times 2\times 2\times \ldots}_{\text{n times}} = 2^n$ rows

A B C	B'	AB'	AB' + C	A + C	B' + C	(A + C) (B' + C)
0 0 0	1	0	0	0	1	0
0 0 1	1	0	1	1	1	1
0 1 0	0	0	0	0	0	0
0 1 1	0	0	1	1	1	1
1 0 0	1	1	1	1	1	1
1 0 1	1	1	1	1	1	1
1 1 0	0	0	0	1	0	0
1 1 1	0	0	1	1	1	1

Boolean Algebra

- VERY nice machinery used to manipulate (simplify) Boolean functions
- George Boole (1815-1864): “An investigation of the laws of thought”
- Terminology:
  - *Literal:* A variable or its complement

    A, B’, x’
  - *Product term:* literals connected by •

    X.Y

    A.B'.C.D,
  - *Sum term:* literals connected by +

    A+B'

    A'+B'+C

Boolean Algebra Properties

Let X: Boolean variable,

0,1: constants

A	B	F=A+B
0	0	0
0	1	1
1	0	1
1	1	1

1. X + 0 = X -- Zero Axiom
2. X • 1 = X -- Unit Axiom
3. X + 1 = 1 -- Unit Property
4. X • 0 = 0 -- Zero Property

A	B	F=A•B
0	0	0
0	1	0
1	0	0
1	1	1

Example: $(AB'+D)E+1=1$

Boolean Algebra Properties (cont.)

Let X: Boolean variable,
0,1: constants

1. $X + X = X$ -- Idempotent
2. $X \cdot X = X$ -- Idempotent
3. $X + X' = 1$ -- Complement
4. $X \cdot X' = 0$ -- Complement
5. $(X')' = X$ -- Involution

A	B	F=A+B
0	0	0
0	1	1
1	0	1
1	1	1

A	B	F=A·B
0	0	0
0	1	0
1	0	0
1	1	1

Example:

$$(AB'+D)(AB'+D)'=0$$

The Duality Principle

- The dual of an expression is obtained by exchanging (• and +), and (1 and 0) in it,
  - provided that the precedence of operations is not changed.
- Do not exchange x with x′
- Example:
  - Find H(x,y,z), the dual of F(x,y,z) = x′yz′ + x′y′z
  - H = (x′+y+z′).(x′+y′+z)
- Dual is not always equal to the original expression

- If a Boolean equation/equality is valid, its dual is also valid

The Duality Principle (cont.)

With respect to duality, identities 1 – 8 have the following relationships:

1. $X + 0 = X$	2. $X \cdot 1 = X$	(dual of 1)
3. $X + 1 = 1$	4. $X \cdot 0 = 0$	(dual of 3)
5. $X + X = X$	6. $X \cdot X = X$	(dual of 5)
7. $X + X' = 1$	8. $X \cdot X' = 0$	(dual of 7)

More Boolean Algebra Properties

Let X,Y, and Z: Boolean variables

10. $X + Y = Y + X$
11. $X \cdot Y = Y \cdot X$ -- Commutative
12. $X + (Y+Z) = (X+Y) + Z$
13. $X \cdot (Y \cdot Z) = (X \cdot Y) \cdot Z$ -- Associative
14. $X \cdot (Y+Z) = X \cdot Y + X \cdot Z$
15. $X+(Y \cdot Z) = (X+Y) \cdot (X+Z)$ -- Distributive
16. $(X + Y)' = X' \cdot Y'$
17. $(X \cdot Y)' = X' + Y'$ -- DeMorgan's Laws

In general:

$$(X_1 + X_2 + \ldots + X_n)' = X_1' \cdot X_2' \cdot \ldots \cdot X_n'$$

$$(X_1 \cdot X_2 \cdot \ldots \cdot X_n)' = X_1' + X_2' + \ldots + X_n'$$

Associative Laws for AND

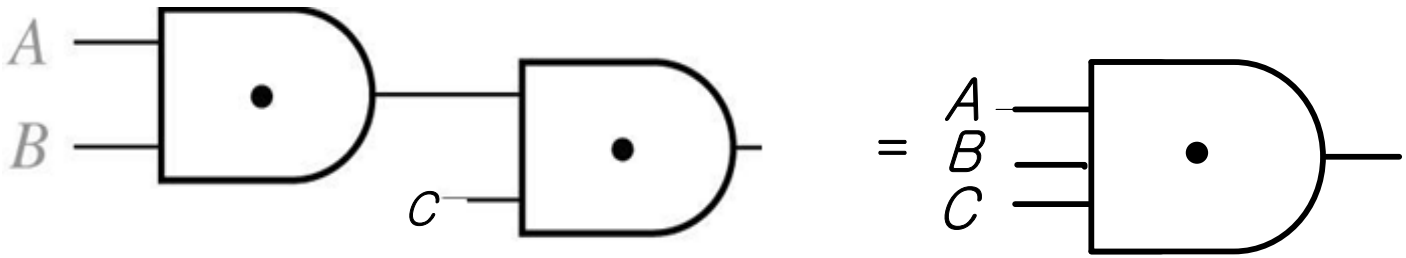

$(AB)C=ABC$

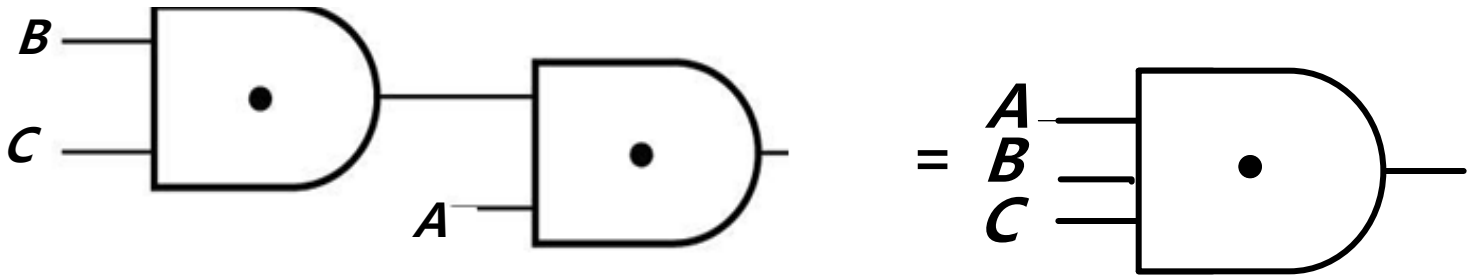

$A(BC)=ABC$

Associative Laws for OR

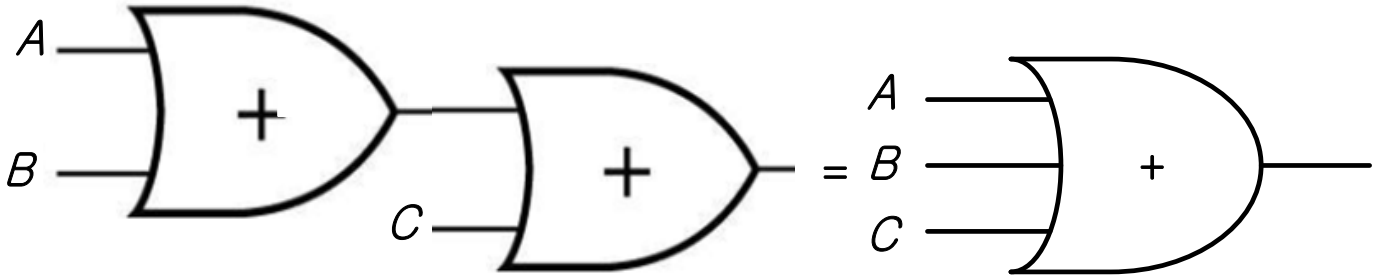

$(A+B)+C=A+B+C$

Proof of Associative Law

Associative Laws:

$$(XY)Z = X(YZ) = XYZ$$

$$(X+Y)+Z = X+(Y+Z) = X+Y+Z$$

Proof of Associative Law for AND:

X	Y	Z	XY	YZ	(XY)Z	X(YZ)
0	0	0	0	0	0	0
0	0	1	0	0	0	0
0	1	0	0	0	0	0
0	1	1	0	1	0	0
1	0	0	0	0	0	0
1	0	1	0	0	0	0
1	1	0	1	0	0	0
1	1	1	1	1	1	1

Distributive Law

Distributive Laws:

$$X(Y+Z) = XY + XZ$$

$$X + YZ = (X+Y)(X+Z)$$

Valid only for Boolean algebra not for ordinary algebra

Proof of the second law:

$$(X+Y)(X+Z) = X(X+Z) + Y(X+Z) = XX + XZ + YX + YZ$$

$$= X + XZ + XY + YZ = X \cdot 1 + XZ + XY + YZ$$

$$= X(1 + Z + Y) + YZ = X \cdot 1 + YZ = X + YZ$$

Note that the first law is used to prove the second one. But considering duality, there was no need to prove the second one!

Absorption Property (Covering)

1. $x + x \cdot y = x$
2. $x \cdot (x+y) = x$ (dual)

- Proof:

$$
\begin{aligned}
x + x \cdot y &= x \cdot 1 + x \cdot y \\
&= x \cdot (1+y) \\
&= x \cdot 1 \\
&= x
\end{aligned}
$$

QED (2 true by duality)

Absorption Property (Covering)

1. $x + x' \cdot y = x + y$
2. $x \cdot (x' + y) = x\,y$ (dual)

- Proof of 2:

$$x \cdot (x' + y) = x \cdot x' + x \cdot y$$
$$= 0 + (x \cdot y)$$
$$= x \cdot y$$

QED (1 true by duality)

DeMorgan's Laws

$$(X+Y)' = X'Y'$$

$$(XY)' = X' + Y'$$

Proof

X	Y	X'	Y'	X + Y	(X + Y)'	X' Y'	XY	(XY)'	X' + Y'
0	0	1	1	0	1	1	0	1	1
0	1	1	0	1	0	0	0	1	1
1	0	0	1	1	0	0	0	1	1
1	1	0	0	1	0	0	1	0	0

DeMorgan's Laws for *n* variables

$$(X_1 + X_2 + X_3 + \ldots + X_n)' = X_1' X_2' X_3' \ldots X_n'$$

$$(X_1 X_2 X_3 \ldots X_n)' = X_1' + X_2' + X_3' + \ldots + X_n'$$

Example

$$(X_1 + X_2 + X_3)' = (X_1 + X_2)' X_3' = X_1' X_2' X_3'$$

Consensus Theorem

1. $xy + x'z + yz = xy + x'z$
2. $(x+y)\cdot(x'+z)\cdot(y+z) = (x+y)\cdot(x'+z)$ (dual)

Proof:

$$
\begin{aligned}
xy + x'z + yz &= xy + x'z + (x+x')yz \\
&= xy + x'z + xyz + x'yz \\
&= (xy + xyz) + (x'z + x'zy) \\
&= xy + x'z
\end{aligned}
$$

QED (2 true by duality).

Consensus Theorem

Example:

$$a'b'+ac+bc'+b'c+ab=a'b'+ac+bc'$$

Consensus Theorem

Example:

$$A'C'D + \cancel{A'BD} + BCD + \cancel{ABC} + ACD'$$

Consensus Theorem

Example:

Reducing an expression:
Add one term and eliminate two!

$$F = ABCD + B'CDE + A'B' + BCE'$$

$$F = ABCD + B'CDE + A'B' + BCE' + \boxed{ACDE}$$

Consensus term added

Final expression

$$F = A'B' + BCE' + ACDE$$

Algebraic Manipulation

- Boolean algebra is a useful tool for simplifying digital circuits.
- Why do simplification?
  1. Fan-in (number of gate inputs) is limited in some technologies:
     - Reduce the number of literals (gate inputs)
  2. Number of gates influences manufacturing costs
     - Reduce the number of gates
  3. Fewer levels of gates implies reduced signal propagation delays and faster design
     - Reduce number of levels of gates (logical depth)

Graphic Look at Algebraic Manipulation

- All various forms of an arbitrary Boolean function with a unique truth table may be considered points in the big circle
- Assume brown x is an arbitrary starting point
- Assume green x is the optimal point
- Amber manipulation path is a correct but long path from the starting point to the optimal
- Green path is a better path to the optimal point
- Correct manipulations remain within the circle
- Any incorrect manipulation takes you out of the circle (the red arrow)

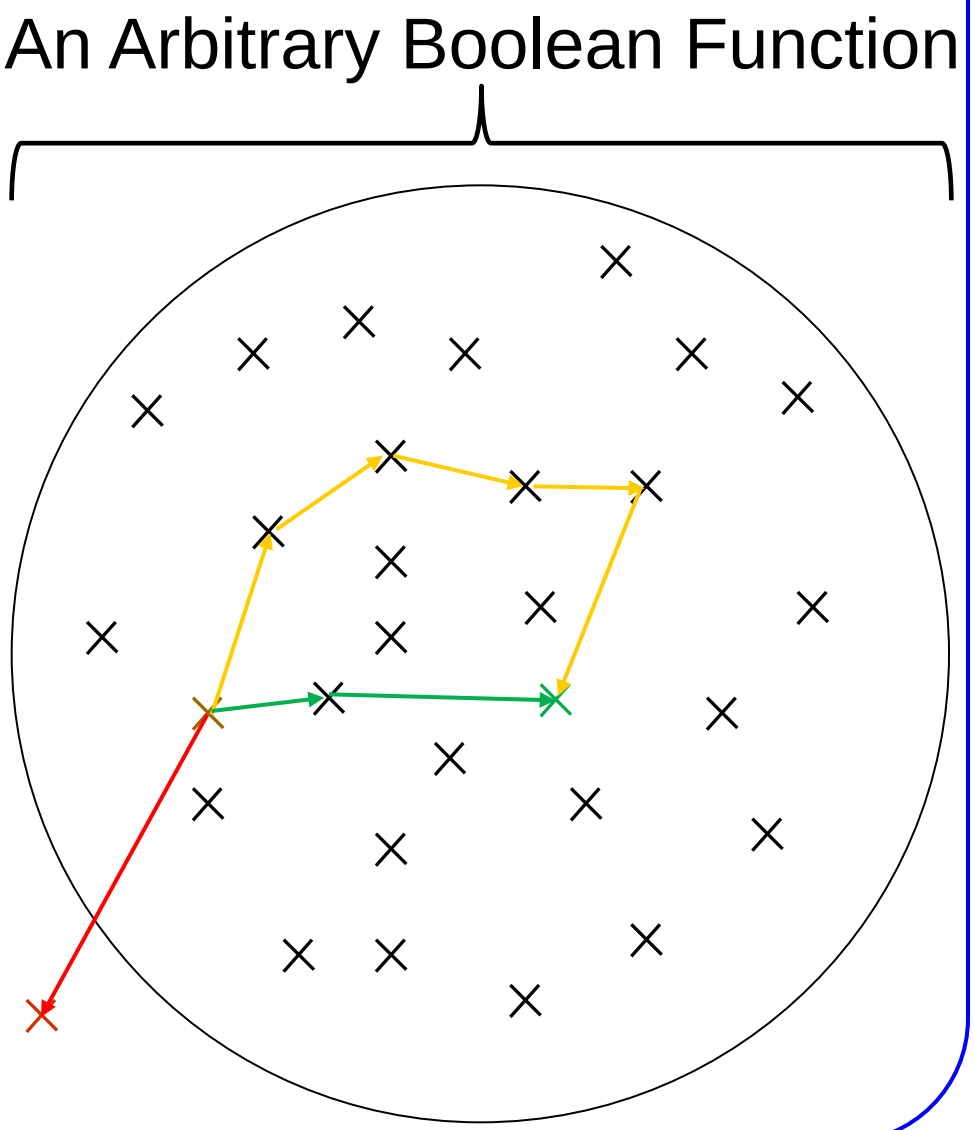

Algebraic Simplification

1. Combining terms $XY + XY' = X$

Example: $abc'd' + abcd' = abd'$ $[X = abd', Y = c]$

2. Adding terms using $X + X = X$

Example: $ab'c + abc + a'bc = ab'c + abc + abc + a'bc = ac + bc$

3. Eliminating terms $X + XY = X$ $XY + XY' = X$

Example: $a'b + a'bc = a'b$ $[X = a'b]$

Example: $(a + bc)(d + e') + a'(b' + c')(d + e') = d + e'$

$[X = d + e', Y = a + bc, Y' = a'(b' + c')]$

Example: $\underline{a'bc'} + \underline{bcd} + a'bd = a'bc' + bcd$

Algebraic Manipulation Example

Example: Simplify $F = x'yz + x'yz' + xz$.

$F = x'yz + x'yz' + xz$

$= x'y(z+z') + xz$

$= x'y \cdot 1 + xz$

$= x'y + xz$

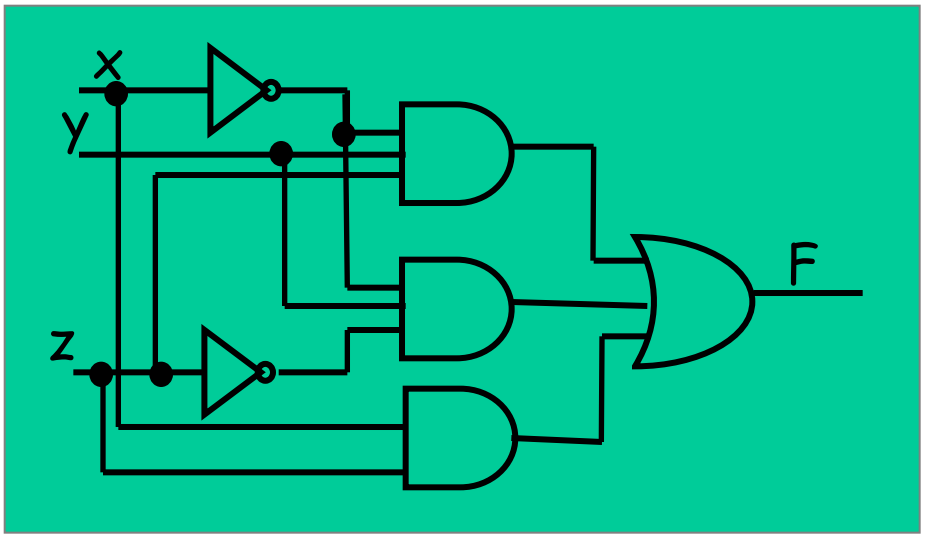

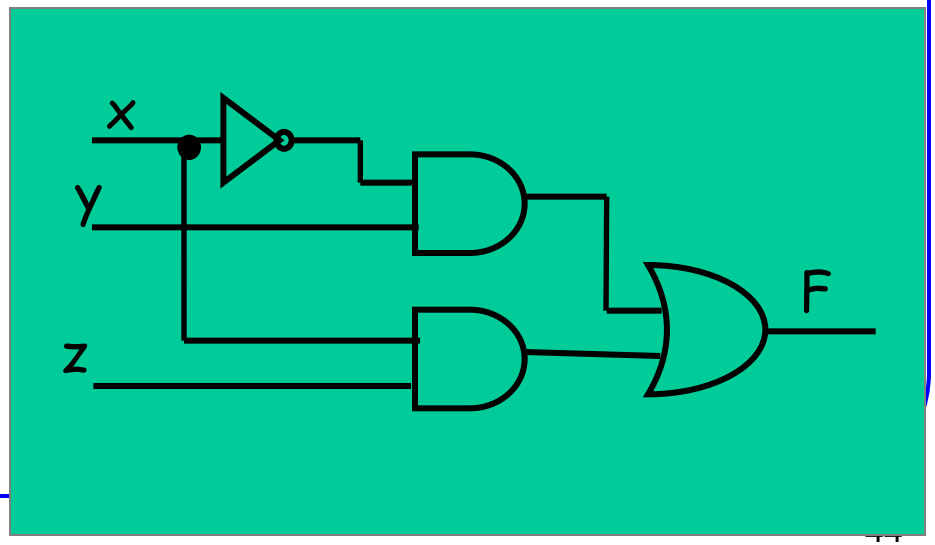

Algebraic Manipulation (cont.)

Example: Prove

$$x'y'z' + x'yz' + xyz' = x'z' + yz'$$

- **Proof:**

$x'y'z' + x'yz' + xyz'$

$= x'y'z' + x'yz' + x'yz' + xyz'$

$= x'z'(y'+y) + yz'(x'+x)$

$= x'z' \cdot 1 + yz' \cdot 1$

$= x'z' + yz'$

QED.

Sum of Products (SoP)

Sum of products form: $AB' + CD'E + AC'E$

Still considered to be in sum of products form:

$$ABC' + DEFG + H$$

$$A + B' + C + D'E$$

Not in sum of products form: $(A+B)CD + EF$

Multiplying out and eliminating redundant terms

$$\begin{aligned}(A+BC)(A+D+E) &= A + AD + AE + ABC + BCD + BCE \\ &= A(1 + D + E + BC) + BCD + BCE \\ &= A + BCD + BCE\end{aligned}$$

Product of Sums (PoS)

Product of sums form: $(A+B')(C+D'+E)(A+C'+E')$

Still considered to be in product of sums form:

$(A+B)(C+D+E)F$

$AB'C(D'+E)$

Circuits for SoP and PoS Forms

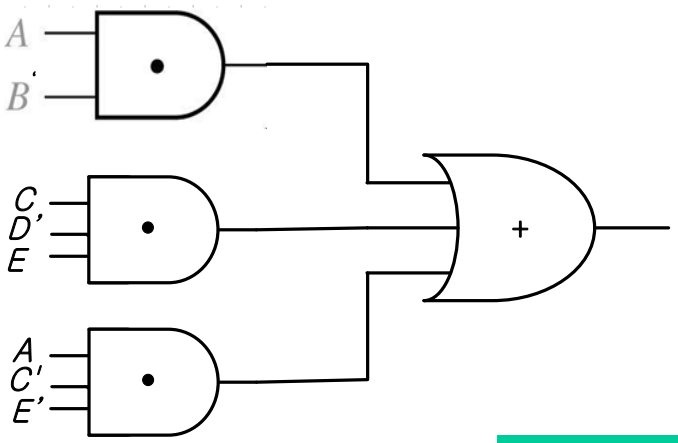

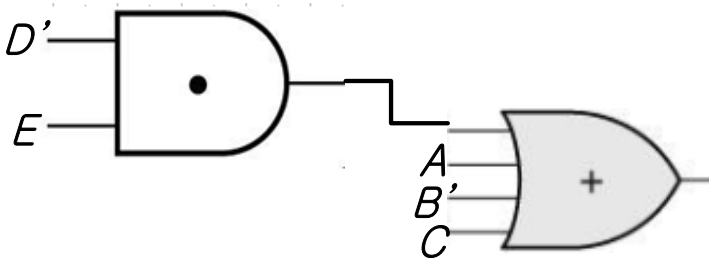

Sum of products form

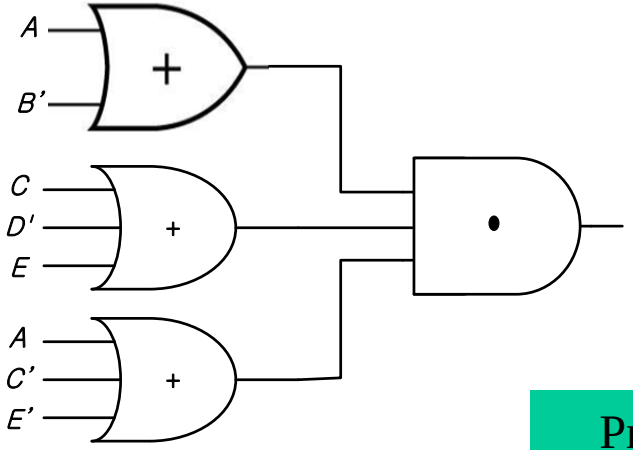

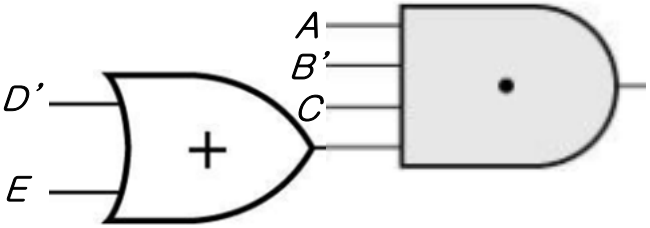

Product of sums form

Multiplying Out and Factoring

To obtain a sum of products form ➔ Multiply out using distributive laws

$$X(Y+Z) = XY + XZ$$

$$(X+Y)(X+Z) = X + YZ$$

A useful theorem for multiplying out:

$$(X+Y)(X'+Z) = XZ + X'Y \qquad (3\text{-}3)$$

If $X = 0$, (3-3) reduces to $Y(1+Z) = 0 + 1*Y$ or $Y = Y$.

If $X = 1$, (3-3) reduces to $(1+Y)Z = Z + 0*Y$ or $Z = Z$.

Example:

The use of Theorem 3-3 for factoring:

$$AB + A'C = (A+C)(A'+B)$$

Multiplying out (another proof)

Theorem for multiplying out:

$$(Q + AB')(C'D + Q') = QC'D + Q'AB'$$

Multiplying out using distributive laws

$$(Q + AB')(C'D + Q') = QC'D + \boxed{QQ' + AB'C'D} + AB'Q'$$

Redundant terms

multiplying out: (a) distributive laws (b) theorem(3-3):

$$(A + B + C')(A + B + D)(A + B + E)(A + D' + E)(A' + C)$$

$$= (A + B + C'D)(A + B + E)[AC + A'(D' + E)]$$

$$= (A + B + C'DE)(AC + A'D' + A'E)$$

$$= AC + \cancel{ABC} + A'BD' + A'BE + A'C'DE$$

What theorem was applied to eliminate *ABC* ?

Factoring Expressions

To obtain a product of sums form ➔ Factoring using distributive laws

Theorem for factoring:

$$\underbrace{AB + A'C} = (A + C)(A' + B)$$

Example of factoring:

$$AC + A'BD' + A'BE + A'C'DE$$

$$= \underbrace{AC}_{XZ} + \underbrace{A'}_{X'}(\underbrace{BD' + BE + C'DE}_{Y})$$

$$= (A + BD' + BE + C'DE)(A' + C)$$

$$= [\underbrace{A + C'DE}_{X} + \underbrace{B}_{Y}(\underbrace{D' + E}_{Z})](A' + C)$$

$$= (A + B + C'DE)(A + \cancel{C'DE} + D' + E)(A' + C)$$

$$= (A + B + C')(A + B + D)(A + B + E)(A + D' + E)(A' + C)$$

Truth Tables (revisited)

- Enumerates all possible combinations of variable values and the corresponding function value
- Truth tables for some arbitrary functions $F_1(x,y,z)$, $F_2(x,y,z)$, and $F_3(x,y,z)$ are shown to the right.

x	y	z		F_1	F_2	F_3
0	0	0		0	1	1
0	0	1		0	0	1
0	1	0		0	0	1
0	1	1		0	1	1
1	0	0		0	1	0
1	0	1		0	1	0
1	1	0		0	0	0
1	1	1		1	0	1

Truth Tables (cont.)

- Truth table: a <u>unique</u> representation of a Boolean function
- If two functions have identical truth tables, the functions are equivalent (and vice-versa).
- Truth tables can be used to prove equality theorems.
- However, the size of a truth table grows <u>exponentially</u> with the number of variables involved.
  - This motivates the use of Boolean Algebra.

Relationship Among Representations

Theorem:

* Any Boolean function that can be expressed as a truth table can be written as an expression in Boolean Algebra using AND, OR, NOT.

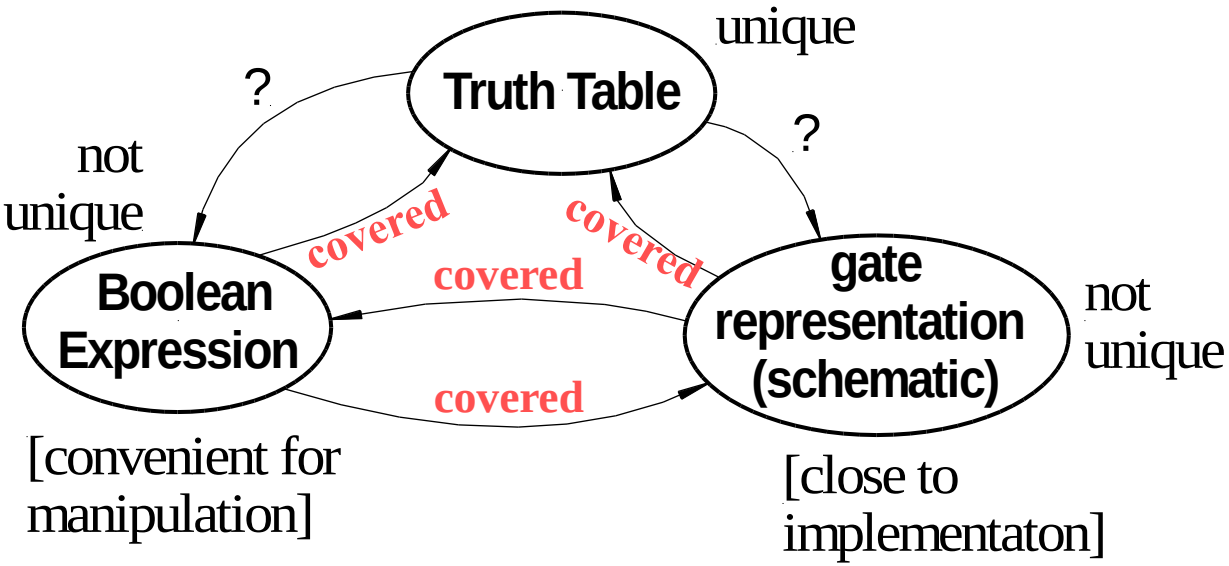

How do we convert from one to the other?
Optimizations?

Circuit Analysis: Gate to TT

- Circuit to be analyzed:

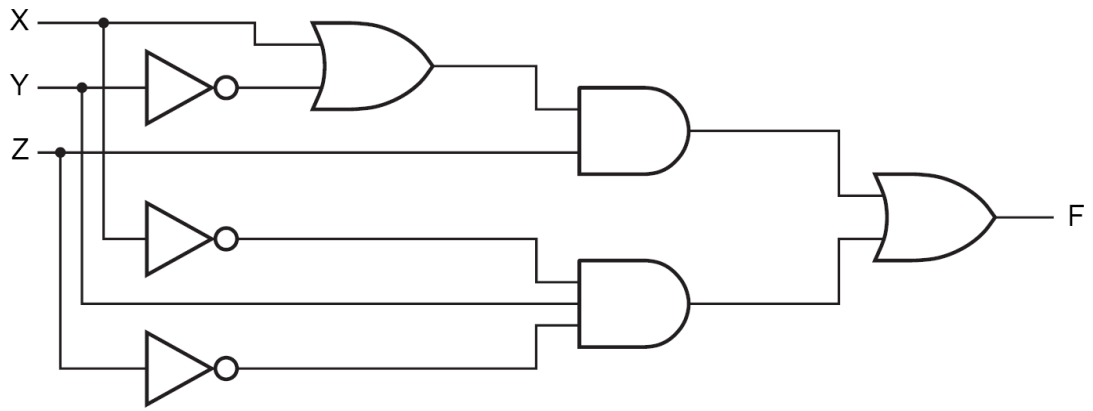

- Consider all possible combinations of inputs

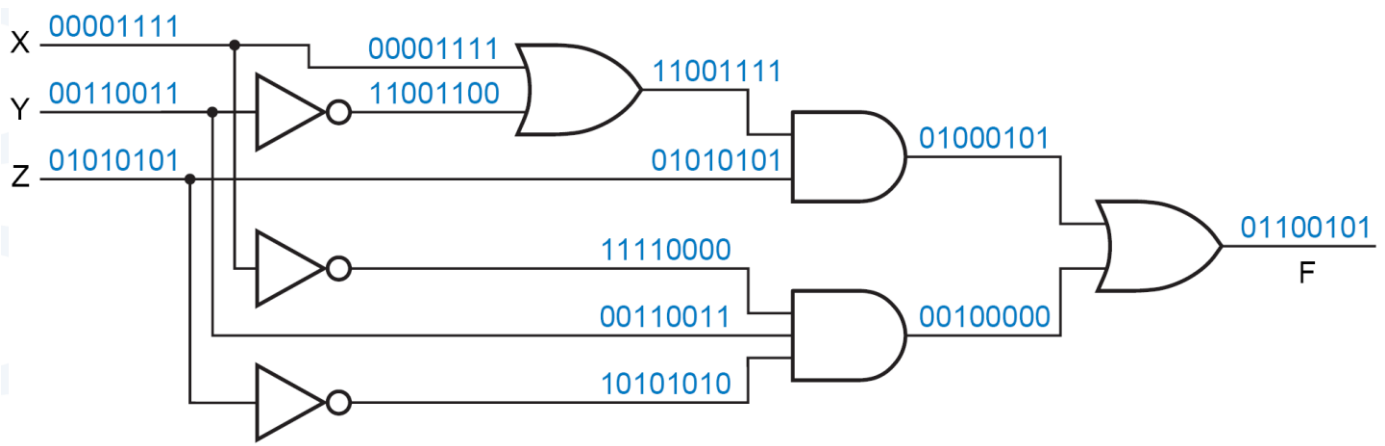

Circuit Analysis: Gate to Boolean

- Circuit to be analyzed:

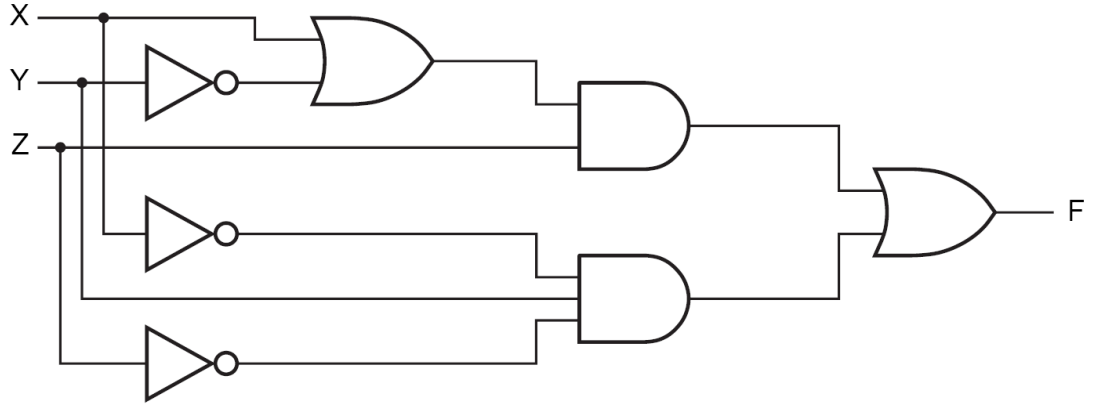

- Can also name the nodes

$N_1 = X+Y'$ $N_2 = N_1.Z$

$N_3 = X'.Y.Z'$

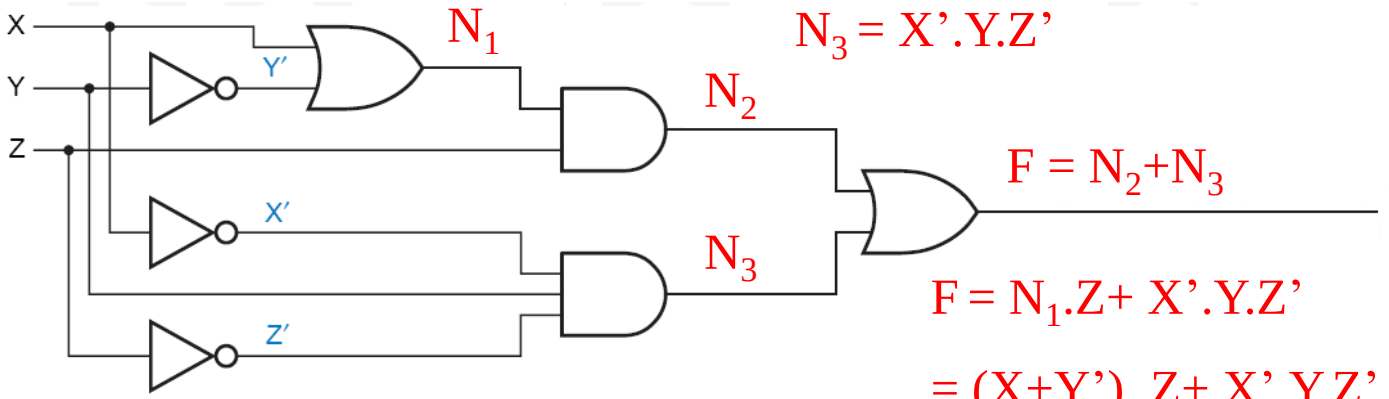

$F = N_2+N_3$

$F = N_1.Z+ X'.Y.Z'$

$= (X+Y'). Z+ X'.Y.Z'$

Boolean expressions- NOT unique

- Unlike truth tables, expressions representing a Boolean function are NOT unique.
- Example:
  - $F(x,y,z) = x' \cdot y' \cdot z' + x' \cdot y \cdot z' + x \cdot y \cdot z'$
  - $G(x,y,z) = x' \cdot y' \cdot z' + y \cdot z'$
- The corresponding truth tables for F() and G() are identical!
- Thus, F() = G()

x	y	z		F	G
0	0	0		1	1
0	0	1		0	0
0	1	0		1	1
0	1	1		0	0
1	0	0		0	0
1	0	1		0	0
1	1	0		1	1
1	1	1		0	0

Complementation: Example

- **Find the complement of $F(x,y,z) = xy'z' + x'yz$**
  - $G = F' = (xy'z' + x'yz)'$
    $= (xy'z')' \cdot (x'yz)'$ *DeMorgan*
    $= (x'+y+z) \cdot (x+y'+z')$ *DeMorgan* again
- **Note:**
  - The complement of a function can also be derived by finding the function's *dual,* and then complementing all of the literals

Complement of a Function

- $\cdot \leftrightarrow +$
- $1 \leftrightarrow 0$
- $X \leftrightarrow X'$
  - interchange 1s to 0s in the truth table column showing F.
  - The *complement* of a function IS NOT THE SAME as the *dual* of a function.

De Morgan's Law for a Complex Expression

- **To invert a function,**
  - Complement all variables and constants,
  - Exchange all + ↔ .
- **Example:**

  ((A + B').C'.D + EF)'

  = ((A'.B) + C + D') . (E' + F')
- **Note:**
  - Don't change operator precedence

Boolean vs. Ordinary Algebra

Some of Boolean Algebra are not true for ordinary algebra

Example: If $x + y = x + z$, then $\cancel{y = z}$

True in ordinary algebra
Not True in Boolean algebra

$$1 + 0 = 1 + 1 \text{ but } 0 \neq 1$$

Example: If $xy = xz$, then $\cancel{y = z}$

True in ordinary algebra
Not True in Boolean algebra

Some of Boolean Algebra properties are true for ordinary algebra too.

Example: If $y = z$, then $x + y = x + z$

If $y = z$, then $xy = xz$

True in both ordinary and Boolean algebra

Gate to Truth Table

- Circuit to be analyzed:

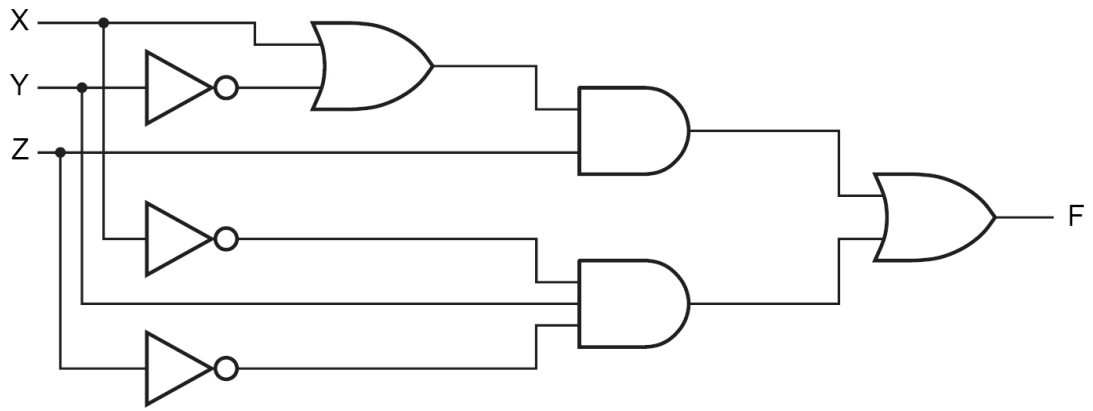

- Consider all possible combinations of inputs

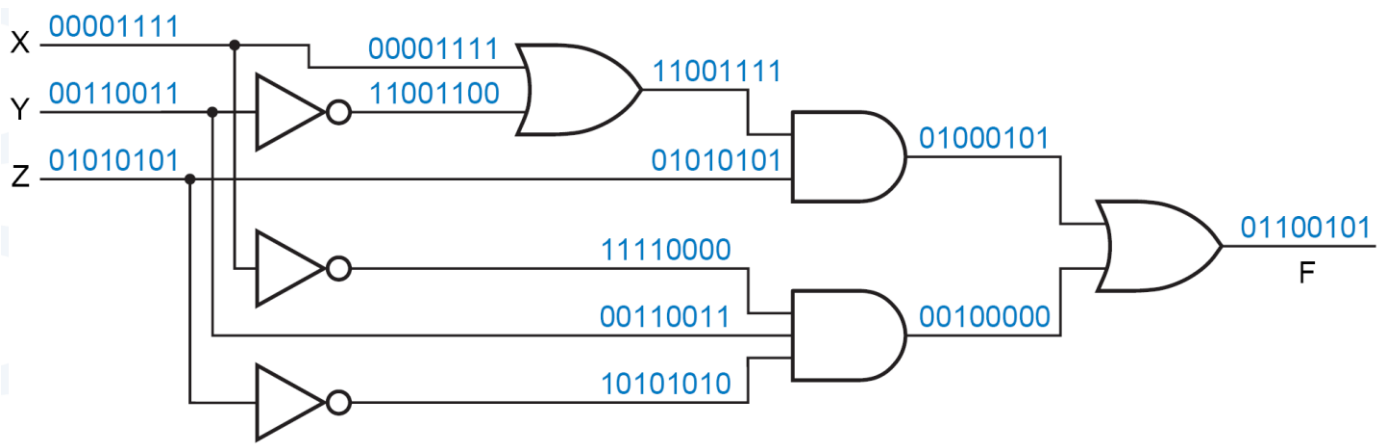

Ckt to Boolean + Boolean to TT

Circuit of logic gates :

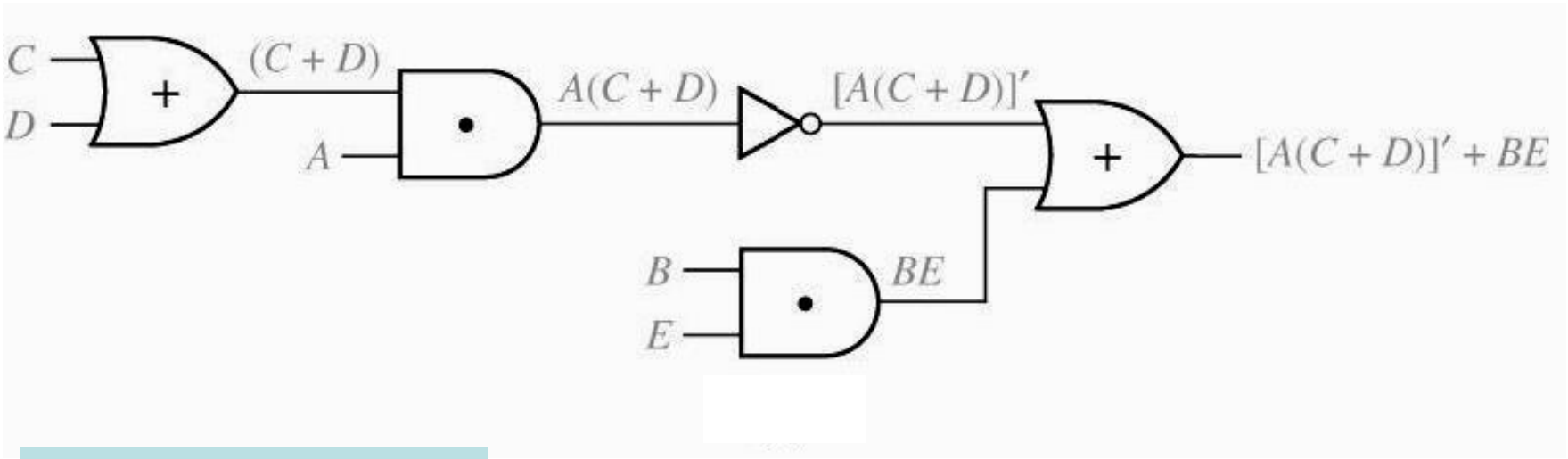

Logic Expression : $[A(C+D)]'+BE$

Logic Evaluation : A=B=C=1, D=E=0

$$[A(C+D)]'+BE=[1(1+0)]'+1\cdot 0=[1(1)]'+0=0+0=0$$

Boolean to Ckt

- **Combinational Circuit Design:**
- **F = A' + B•C' + A'•B'**
  - connect input signals and logic gates:
    - Circuit input signals → from function variables (A, B, C)
    - Circuit output signal → function output (F)
    - Logic gates → from logic operations

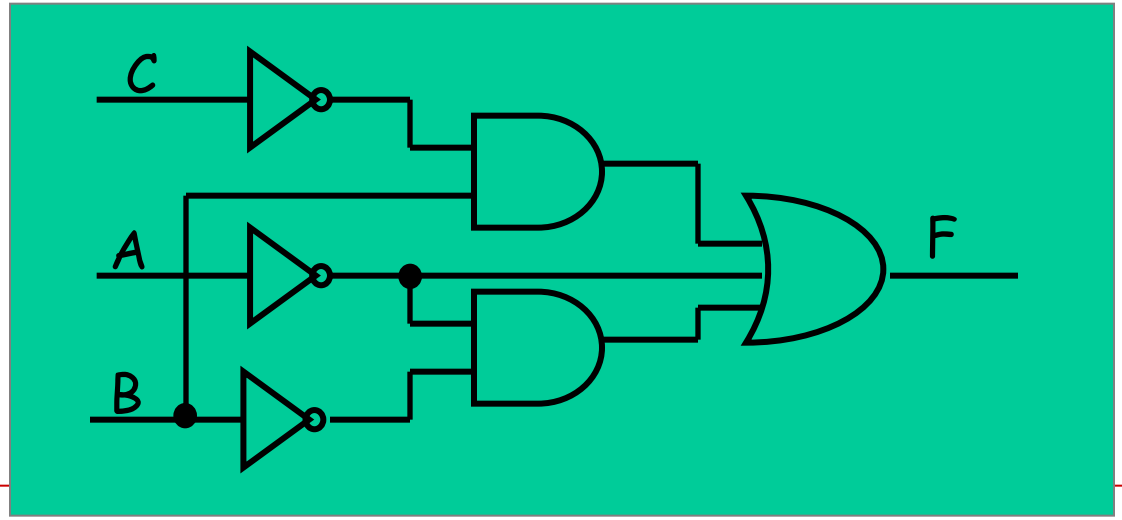

Minterms and Maxterms

- ***Minterm:***
  - A product term (with value 1) in which all the variables appear exactly once, either complemented or uncomplemented
- ***Maxterm:***
  - A sum term (with value 0) in which...
  - Minterms and Maxterms are easy to denote using a truth table.
  - Note: $m_i = M_i'$

x	y	z		Minterm	Maxterm
0	0	0		$x'y'z' = m_0$	$x+y+z = M_0$
0	0	1		$x'y'z = m_1$	$x+y+z' = M_1$
0	1	0		$x'yz' = m_2$	$x+y'+z = M_2$
0	1	1		$x'yz = m_3$	$x+y'+z' = M_3$
1	0	0		$xy'z' = m_4$	$x'+y+z = M_4$
1	0	1		$xy'z = m_5$	$x'+y+z' = M_5$
1	1	0		$xyz' = m_6$	$x'+y'+z = M_6$
1	1	1		$xyz = m_7$	$x'+y'+z' = M_7$

Canonical Forms: Unique

- Any Boolean function F( ) can be expressed as a *unique* **sum** of **min**terms (and a unique **product** of **max**terms)
- In other words, every function F() has two canonical forms:
  - Canonical Sum-Of-Products (sum of minterms)
  - Canonical Product-Of-Sums (product of maxterms)

Graphic Look at SoP and PoS

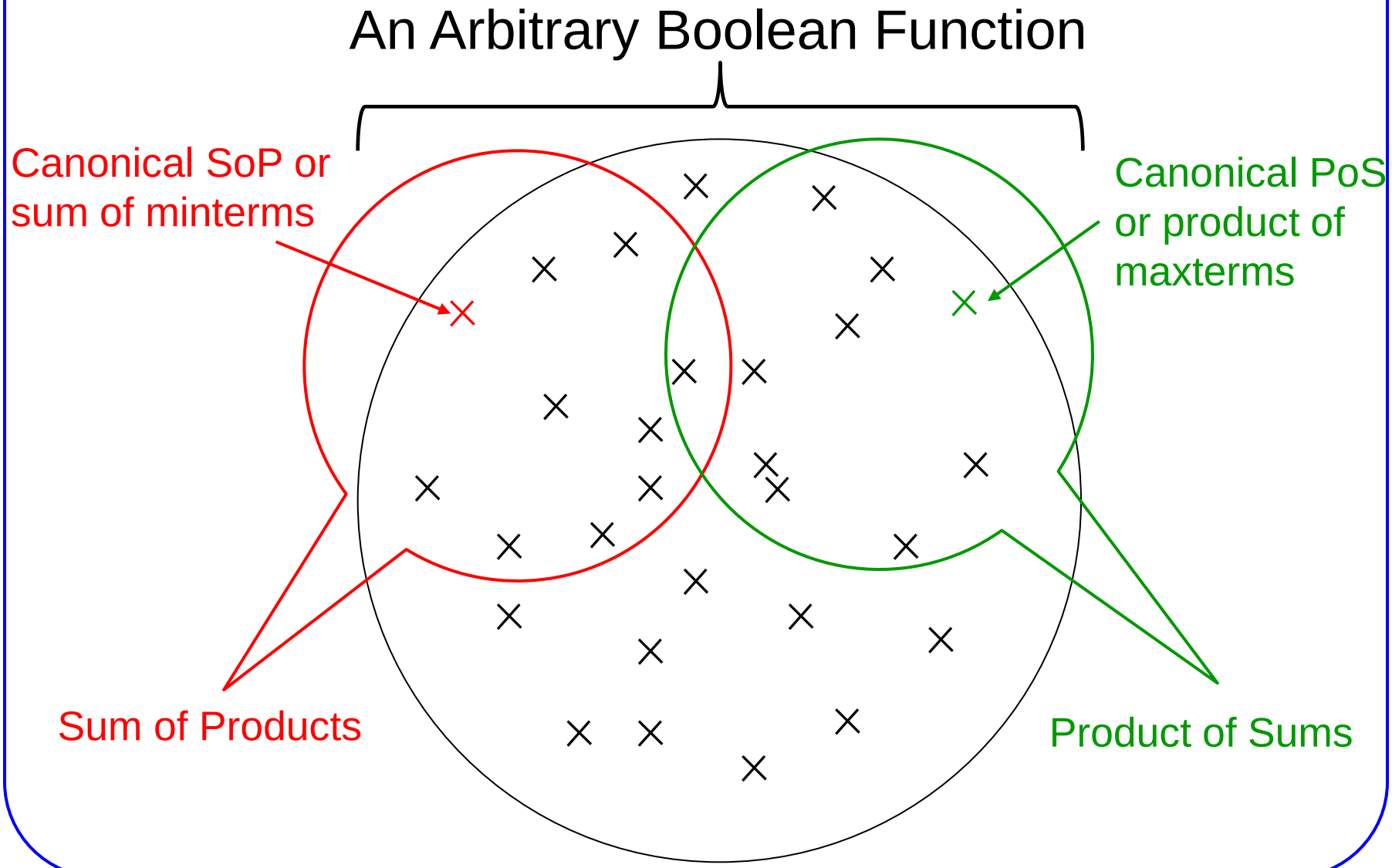

Canonical Forms (cont.)

- **Canonical Sum-Of-Products:**
  - The minterms included are those m_j such that F( ) = 1 in row *j* of the truth table for F( ).
- **Canonical Product-Of-Sums:**
  - The maxterms included are those M_j such that F( ) = 0 in row *j* of the truth table for F( ).

Example

$f_1(a,b,c) = m_1 + m_2 + m_4 + m_6$

$= a'b'c + a'bc' + ab'c' + abc'$

$f_1(a,b,c) = M_0 \cdot M_3 \cdot M_5 \cdot M_7$

$= (a+b+c)\cdot(a+b'+c')\cdot$
$(a'+b+c')\cdot(a'+b'+c').$

a	b	c		f_1
0	0	0	0	0
0	0	1	1	1
0	1	0	2	1
0	1	1	3	0
1	0	0	4	1
1	0	1	5	0
1	1	0	6	1
1	1	1	7	0

- **Again observe that $m_j = M_j'$**

Shorthand: $\sum$ and $\prod$

- **$f_1(a,b,c) = \sum m(1,2,4,6)$,**
  - $m_1 + m_2 + m_4 + m_6$.
- **$f_1(a,b,c) = \prod M(0,3,5,7)$,**
  - $M_0 \,.\, M_3 \,.\, M_5 \,.\, M_7$.

$$\sum m(1,2,4,6) = \prod M(0,3,5,7) = f_1(a,b,c)$$

Conversion Between Canonical Forms

- Replace $\sum$ with $\prod$ (or *vice versa*) and replace those *j*'s that appeared in the original form with those that did not.

- **Example:**
  - $f_1(a,b,c) = a'b'c + a'bc' + ab'c' + abc'$

$$= m_1 + m_2 + m_4 + m_6$$

$$= \sum(1,2,4,6)$$

$$= \prod(0,3,5,7)$$

$$= (a+b+c)\cdot(a+b'+c')\cdot(a'+b+c')\cdot(a'+b'+c')$$

Standard Forms (NOT Unique)

- Standard forms are "*like*" canonical forms,
  - not all variables need to appear in the individual product (SOP) or sum (POS) terms.

- **Example:**
  - $f_1(a,b,c) = a'b'c + bc' + ac'$ is a *standard* sum-of-products form
  - $f_1(a,b,c) = (a+b+c)\cdot(b'+c')\cdot(a'+c')$ is a *standard* product-of-sums form.

Alternative Implementations

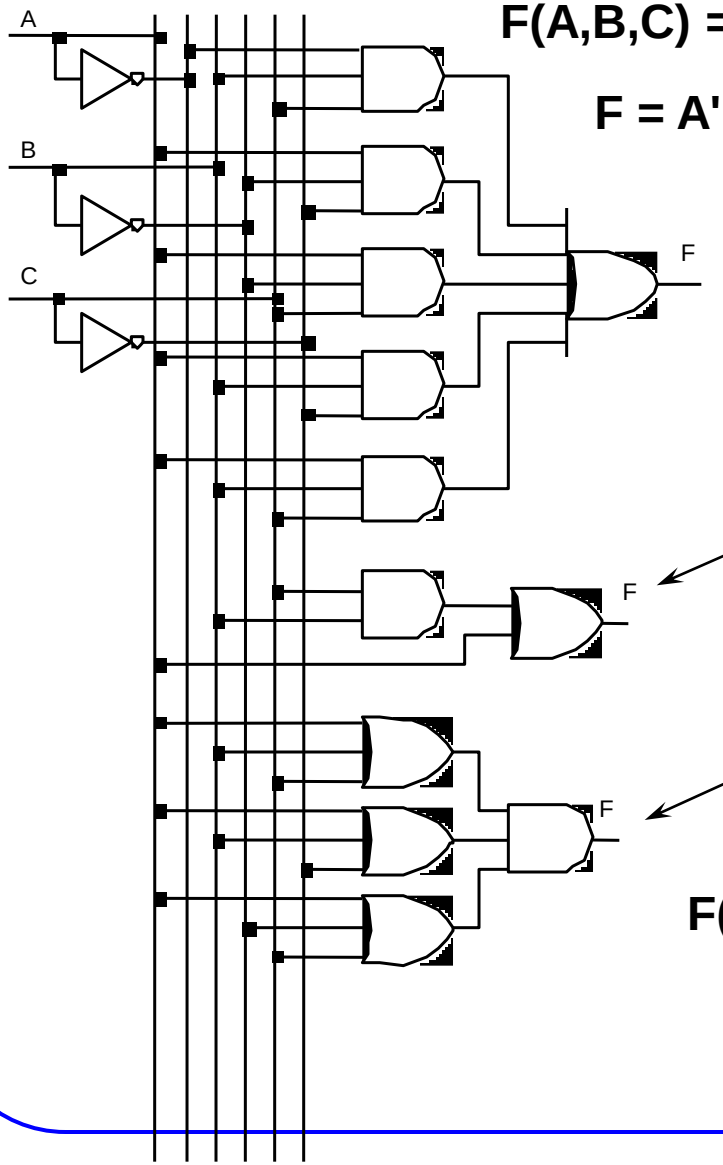

$F(A,B,C) = \Sigma m(3,4,5,6,7)$

$F = A'\,B\,C + A\,B'\,C' + A\,B'\,C + A\,B\,C' + A\,B\,C$

Canonical Sum of Products

Standard Sum of Products

$A + B\,C$

Canonical Product of Sums

$F(A,B,C) = \Pi M(0,1,2)$

$= (A + B + C)\,(A + B + C')\,(A + B' + C)$

Conversion of SOP from standard to canonical

- Expand *non-canonical* terms by inserting equivalent of 1 for each missing variable
  - x: $(x + x') = 1$
- Remove duplicate minterms
- $f_1(a,b,c) = a'b'c + bc' + ac'$

$$= a'b'c + (a+a')bc' + a(b+b')c'$$
$$= a'b'c + abc' + a'bc' + abc' + ab'c'$$
$$= a'b'c + abc' + a'bc + ab'c'$$

Conversion of POS from standard to canonical

- Expand noncanonical terms by adding 0 in terms of missing variables (*e.g.*, $xx' = 0$) and using the distributive law
- Remove duplicate maxterms
- $f_1(a,b,c) = (a+b+c)\cdot(b'+c')\cdot(a'+c')$

$$= (a+b+c)\cdot(aa'+b'+c')\cdot(a'+bb'+c')$$
$$= (a+b+c)\cdot(a+b'+c')\cdot(a'+b'+c')\cdot$$
$$(a'+b+c')\cdot(a'+b'+c')$$
$$= (a+b+c)\cdot(a+b'+c')\cdot(a'+b'+c')\cdot(a'+b+c')$$

Conversion of Natural Language Sentences to Boolean Equations

- The first step in designing a logic network:
  - To translate natural language sentences to Boolean equations:
    - We must break down each sentence into phrases
    - And associate a Boolean variable with each phrase (possible if a phrase can have a “true”/”false” value)
- Example:
  - Ali watches TV if it is Monday night and he has finished his homework.
  - → F = A . B

Main Steps

- Three main steps in designing a single-output combinational switching network:
  - Find a switching function which specifies the desired behavior of the network.
  - Find a simplified algebraic expression for the function.
  - Realize the simplified function using available logic elements.

Example

- Four chairs in a row: design a circuit that shows a 1 if no adjacent chairs are empty
  - Occupied: ‘1’
  - Empty: ‘0’
  - F = ‘1’ iff there are no adjacent empty chairs.

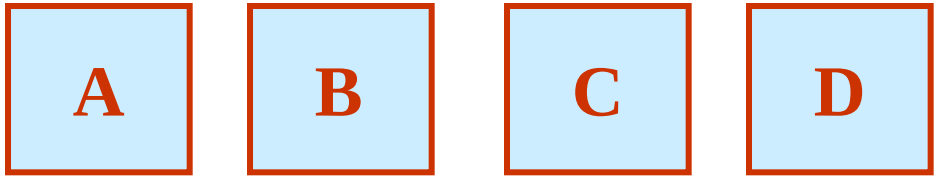

F = (A’B’ + B’C’ + C’D’)’

Example (Continued)

$$F = (A'B' + B'C' + C'D')'$$

$$= (A'B')' \,.\, (B'C')' \,.\, (C'D')'$$

$$= (A+B).(B+C).(C+D)$$

$$= (B+AC).(C+D)$$

$$= BC + BD + AC + ACD$$

$$= BC + BD + AC$$

Problem Solving

- More often, we describe a logic function using a natural language connectives “and,” “or,” and “not.”

- **Example 2: An alarm circuit**
  - The house is secure if the WINDOW, DOOR, and GARAGE inputs are all 1
  - The ALARM output is 1 if the PANIC input is 1, or if the ENABLE input is 1, the EXITING input is 0, and the house is not secure

$$\mathbf{SECURE = WINDOW \,.\, DOOR \,.\, GARAGE}$$

$$\mathbf{ALARM = PANIC + ENABLE \,.\, EXITING' \,.\, SECURE'}$$

$$\mathbf{ALARM = PANIC + ENABLE \,.\, EXITING' \,.\, (WINDOW \,.\, DOOR \,.\, GARAGE)'}$$

Problem Solving

- Sometimes we have to work with imprecise word descriptions of logic functions.

- **Example 3:**
  - "The ERROR output should be 1 if the GEAR, CLUTCH, and BRAKE inputs are inconsistent."
    - e.g., the gear cannot be shifted unless the clutch is applied.
  - In this situation:
    - Truth-table approach is the best.
    - It allows us to determine the output required for every input combination, based on our understanding of the problem and the knowledge of environment.

Example

- **A 4-bit Prime Number Detector**

$F = \Sigma_{N3,N2,N1,N0}(1, 2, 3, 5, 7, 11, 13)$

$=N3'.N2'.N1'.N0 + N3'.N2'.N1.N0' + N3'.N2'.N1.N0 + N3'.N2.N1'.N0 + N3'.N2.N1.N0 + N3.N2'.N1.N0 + N3.N2.N1'.N0$

$=N3'.N1'.N0 + N3'.N2'.N1 + N3'.N2.N1.N0 + N3.N2'.N1.N0 + N3.N2.N1'.N0$

$=\ldots$

- براي عبارات پيچيده، كار بهينه‌سازي سخت‌تر مي‌شود
- نياز به روشي سيستماتيک و آسان‌تر: جدول كارنو
  - شما را از جبر بول بي‌نياز نمي‌كند.

More Logic Gates

- **NAND:**
  - *NOT-AND*
    - Its output = 1 if at least one input is 0.
    - **(A • B)'**

A	B	(A.B)'
0	0	1
0	1	1
1	0	1
1	1	0

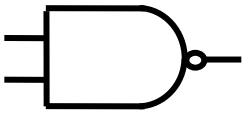

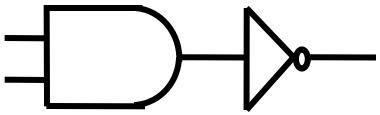

  - has traditionally been the *universal gate* in digital circuits.
    - It is simple to implement in hardware and can be used to construct all other gates.

More Logic Gates

- **NOR:**
  - *NOT-OR*
    - Its output = 1 if all inputs are 0.
    - **(A + B)'**

A	B	(A+B)'
0	0	1
0	1	0
1	0	0
1	1	0

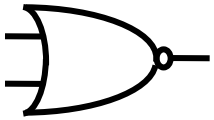

  - Can be a *universal gate.*

More Logic Gates

- **XOR:**
  - *Inequality*
    - Its output = 1 if inputs are <u>not</u> equal.
    - **A ⊕ B**

A	B	A XOR B
0	0	0
0	1	1
1	0	1
1	1	0

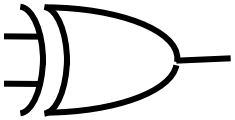

More Logic Gates

- **3-input XOR:**
  - Its output = 1 only if one input is 1 or all three inputs are 1.
  - **$(A \oplus B \oplus C) = (A \oplus B) \oplus C = A \oplus (B \oplus C)$**

A	B	C	A XOR B XOR C
0	0	0	0
0	0	1	1
0	1	0	1
0	1	1	0
1	0	0	1
1	0	1	0
1	1	0	0
1	1	1	1

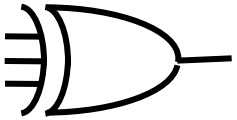

More Logic Gates

- **XNOR:**
  - *Equality*
    - Its output = 1 if both inputs <u>are</u> equal.
    - **(A ⊕ B)'**

A	B	A XNOR B
0	0	1
0	1	0
1	0	0
1	1	1

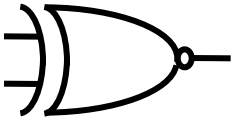

Theorems for XOR

$$X \oplus 0 = X$$

$$X \oplus 1 = X'$$

$$X \oplus X = 0$$

$$X \oplus X' = 1$$

$$X \oplus Y = Y \oplus X \text{ (commutative law)}$$

$$(X \oplus Y) \oplus Z = X \oplus (Y \oplus Z) = X \oplus Y \oplus Z \text{ (associative law)}$$

$$X(Y \oplus Z) = XY \oplus XZ \text{ (distributive law)}$$

$$X \oplus Y = XY' + X'Y$$

$$(X \oplus Y)' = X \oplus Y' = X' \oplus Y = XY + X'Y'$$

$$(X \oplus Y)' = (XY' + X'Y)' = XY + X'Y'$$

Incompletely Specified Functions

- **Don't Care:**
  - *We don't care about the output values for some input patterns.*
  - *This fact can be exploited during circuit minimization.*
- ***Example:***
  - *BCD incrementer:*

A	B	C	D	W	X	Y	Z
0	0	0	0	0	0	0	1
0	0	0	1	0	0	1	0
0	0	1	0	0	0	1	1
0	0	1	1	0	1	0	0
0	1	0	0	0	1	0	1
0	1	0	1	0	1	1	0
0	1	1	0	0	1	1	1
0	1	1	1	1	0	0	0
1	0	0	0	1	0	0	1
1	0	0	1	0	0	0	0
1	0	1	0	X	X	X	X
1	0	1	1	X	X	X	X
1	1	0	0	X	X	X	X
1	1	0	1	X	X	X	X
1	1	1	0	X	X	X	X
1	1	1	1	X	X	X	X

Off set of W

On set of W

Don't Care (DC) set of W

These input patterns should never be encountered so in practice associated output values are "Don't Cares"

Don't Cares and Canonical Forms

Canonical Representations of the BCD Incrementer:

$$Z = m0 + m2 + m4 + m6 + m8 + d10 + d11 + d12 + d13 + d14 + d15$$

$$Z = \Sigma m(0, 2, 4, 6, 8) + d(10, 11, 12 ,13, 14, 15)$$

$$Z = M1 \bullet M3 \bullet M5 \bullet M7 \bullet M9 \bullet D10 \bullet D11 \bullet D12 \bullet D13 \bullet D14 \bullet D15$$

$$Z= \Pi M(1, 3, 5, 7, 9) \bullet D(10, 11, 12, 13, 14 ,15)$$